LEONARDO
TECHNOLOGY FOR A SAFER FUTURE

RIAce
Leonardo Electronics

Bridging the Domains

Elevating NATO Collective Training with RIACE Distributed Mission Training

Luca Cistriani

Head of Distributed Synthetic Environment Dpt.

Multi Domain Digital Environment Engineering

Training & Simulation Business Area

Ronchi dei Legionari (Gorizia)

NATO CA2X2 Forum - Rome – 29th September 2026

Please avoid printing this colourful slide. Let's save the planet together.

Bridging the Domains

Elevating NATO Collective Training with RIACE Distributed Mission Training

Summary

1. **The MDO Training Challenge:** 03
   Physical and operational constraints of live-only exercises.
2. **The RIACE & DMT Solution:** 05
   Core hardware-software architecture and security framework.
3. **High-Fidelity AI Tactics:** 08
   Generating non-scripted Constructive forces and the Doctrine Editor.
4. **LVC Operational Milestones:** 12
   Key lessons from Exercises Spartan Warrior and Centurion Warrior 25.
5. **Strategic Frameworks:** 17
   Project FEDERATES and alignment with NATO MSaaS vision.

© 2026 Leonardo - Società per Azioni

1. The MDO Training Challenge

Physical and operational constraints of live-only exercises

Please avoid printing this colourful slide. Let's save the planet together.

The Multi-Domain Operations (MDO) Friction

The Goal:

Synchronization across Land, Maritime, Air, Cyber, and Space.

The Barrier:

Live exercises face soaring logistics, airspace limitations, and security restrictions for advanced threats.

© 2026 Leonardo - Società per Azioni

2. The RIACE & DMT Solution

Core hardware-software architecture and security framework

Please avoid printing this colourful slide. Let's save the planet together.

The Solution: DMT Infrastructure & RIACE

DMT Architecture:

Modular hardware-software framework for complex tactical scenarios.

RIACE:

Next-generation distributed synthetic environment serving as the digital backbone.

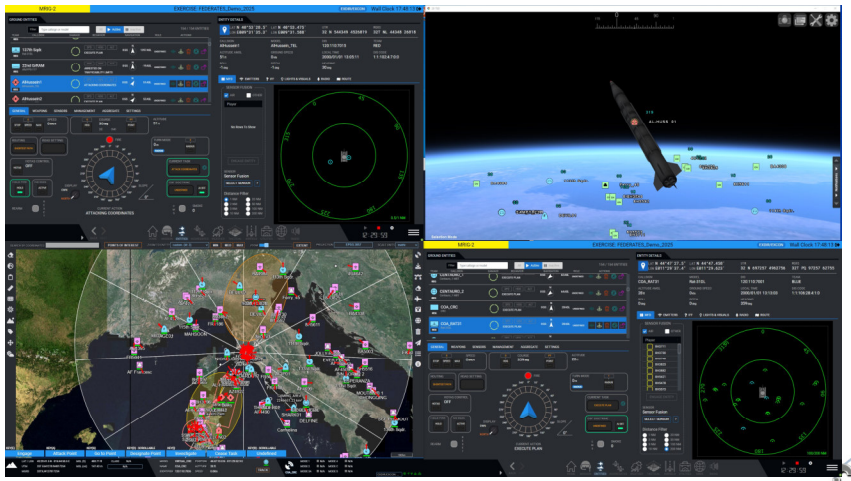

© 2026 Leonardo - Società per Azioni

Enabling Robust LVC Federation

Unified Tactical Space:

Seamless Live, Virtual, and Constructive federation.

Distributed C2 Nodes:

Interconnects geographically dispersed physical platforms and command centers simultaneously.

© 2026 Leonardo - Società per Azioni

3. High-Fidelity AI Tactics

Generating non-scripted Constructive forces and the Doctrine Editor

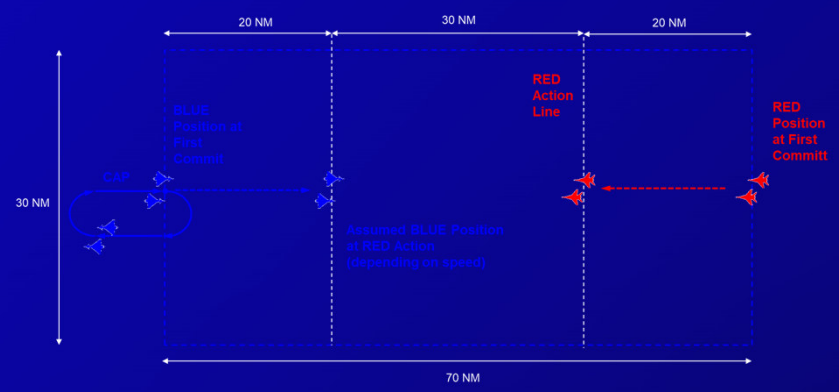

Please avoid printing this colourful slide. Let's save the planet together.

Inside RIACE: AI & High-Fidelity Constructive Forces

Dense Synthetic Spaces:

Generates highly realistic, non-scripted Constructive forces.

Core Engine:

Predictive behavior models, autonomous sensor management, and physical systems friction simulation.

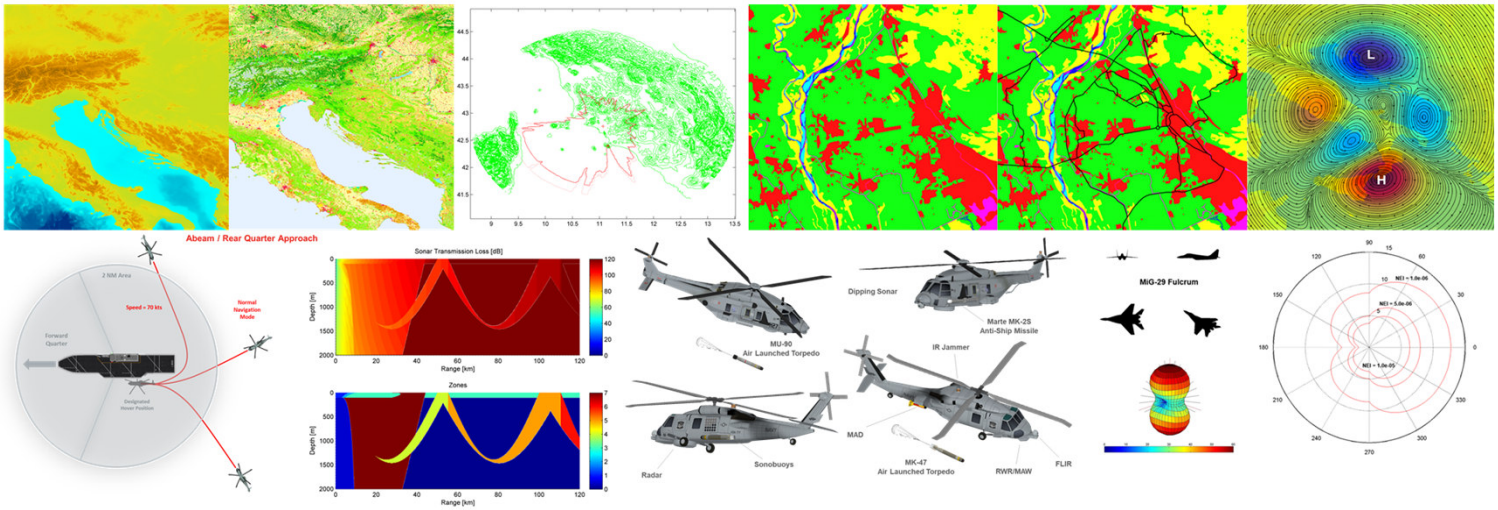

© 2026 Leonardo - Società per Azioni

The Tactical Edge: Typhoon Mission Trainer (TMT)

Deployable Capability:

Containerized part-task trainer for mission-oriented training.

System Fidelity:

Replicates complete fighter subsystems (Radar, IRST, DASS, MIDS) for trainees or manned adversaries.

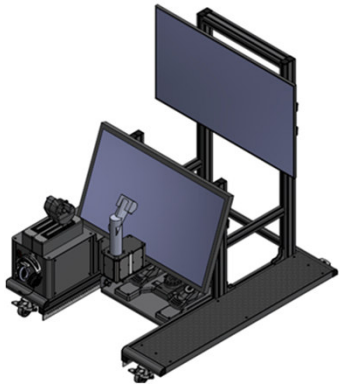

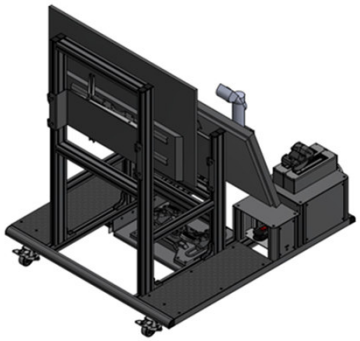

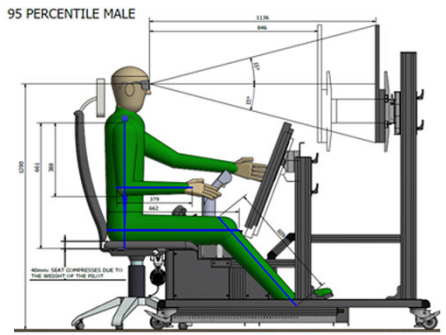

© 2026 Leonardo - Società per Azioni

Beyond Visual Range (BVR) Tactics Validation

Autonomous Threats:

Controlled by the RIACE Doctrine Editor.

Tactical Simulation:

Realistic AI active radar homing management, BVR weapons mechanics, and countermeasures.

- Radar: Captor-M (ON)
- IRST: Pirate (ON)
- FLIR: Pirate EOTS (ON)
- RWR/ESM: Praetorian DASS (ON)
- ECM: Praetorian DASS (OFF)
- MAW: Praetorian DASS (ON)
- Chaff/Flares: C320 / F32
- Towed Decoy: Ariel MkII
- IFF: NATO IFF (ON - Mode 4 VALID)
- Datalink: Link16 MIDS (ON)
- Gun: Mauser BK-27 (150 rounds)
- SCL: 2 x 1000 lt Fuel Tanks
  4 x AIM-120C5 AMRAAM (INS/Datalink/ARH)
  4 x IRIS-T

- Radar: N-019 Rubin (ON)
- IRST: S-31E2 Kols (ON)
- FLIR: N/A
- RWR/ESM: SPO-15 Beryoza (ON)
- ECM: N/A
- MAW: N/A
- Chaff/Flares: C30 / F30
- Towed Decoy: N/A
- IFF: Soviet IFF (ON)
- Datalink: TKS-2 (OFF)
- Gun: GSh-30-1 (150 rounds)
- SCL: 2 x AA-10C (SARH)
  4 x AA-11

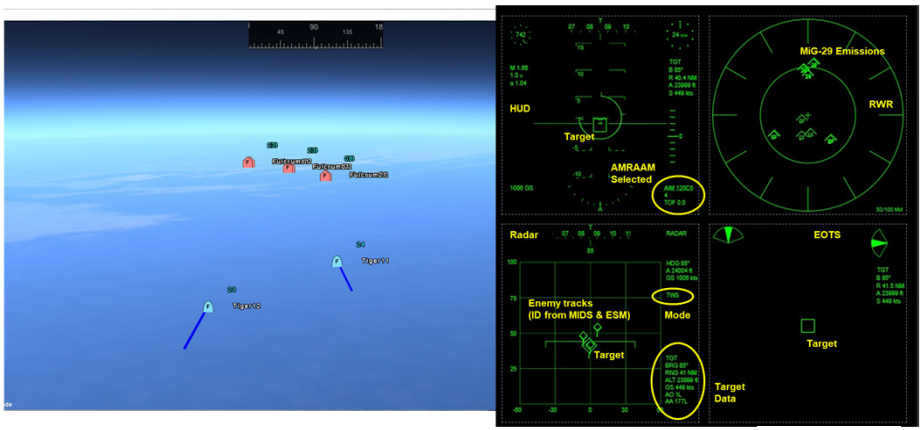

© 2026 Leonardo - Società per Azioni

4. LVC Operational Milestones

Key lessons from Exercises SW 24-2 and CW-25.

Please avoid printing this colourful slide. Let's save the planet together.

Operational Milestones:

2018 – Spartan Alliance 18-8 Exercise
- "First time" for Italian Air Force (ITAF)
- Large number of sites/simulators involved
- Italian playground

2019 – Spartan Warrior 19-2 Exercise
- Classical WPC Warrior scenario
- OCA/DCA constructive missions
- Central Europe playground

2020 – Spartan Warrior 20-9 Exercise
- **NATO Exercise with Coalition Training Objectives**
- **OCA/DCA, COMAO, CAS, SCAR constructive missions**
- **Eastern Europe and Baltic playground**

2024 – Spartan Warrior 24-2 Exercise
- DCA, BMD, SBAD constructive missions
- Eastern Europe and Black-Sea playground

2025 – Centurion Warrior 25 Exercise – ITAF ONLY
- Live-Virtual-Constructive Exercise for Live EF2000 & F-35
- OCA/DCA, SBAD, COMAO, C2 coord. Missions (IADS)

2026 – Centurion Warrior 26 Exercise – ITAF ONLY
- Constructive training for C2 & SBAD (IADS)
- Multiple threats (air, space, drones)

Spartan Warrior 20-9

https://www.usafe.af.mil/News/Article-Display/Article/2367496/spartan-warrior-20-9-nato-strengthens-air-power-through-distributed-training/

© 2026 Leonardo - Società per Azioni

Operational Milestones: Exercise Spartan Warrior 24-2

Coalition Training:

Connected many NATO nations over the CFBL Net.

Italian Contribution:

Virtual TMTs (Grosseto) and constructive forces (Poggio Renatico) with live operational CRCs.

https://www.aeronautica.difesa.it/news/esercitazioni-conclusa-la-spartan-warrior-24-02/

© 2026 Leonardo - Società per Azioni

Pushing LVC Boundaries: Centurion Warrior 25

True LVC Integration:

4th & 5th Gen live assets (EF2000/F-35) flying against synthetic threats.

Technical Enablers:

Multi-Datalink Processor (M-DLP) and VODIS tactical Radio-Bridges.

https://www.aeronautica.difesa.it/news/esercitazioni-conclusa-la-centurion-warrior-2025/

© 2026 Leonardo - Società per Azioni

Future Roadmap: Training IADS for Current & Next-Gen Threats

IADS Adaptation:

Scaling the synthetic environment to stress complex Command & Control architectures.

Multi-Threat Injection:

Integrating dense constructive scenarios featuring asymmetric drones and space-layered inputs.

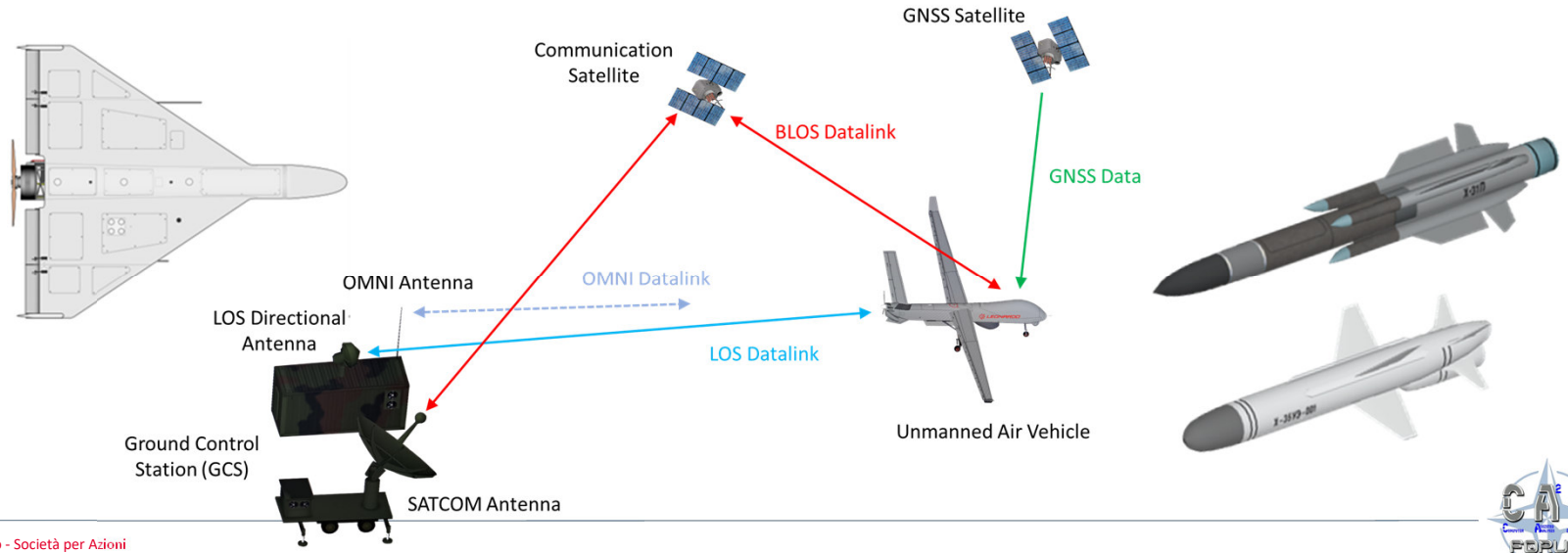

© 2026 Leonardo - Società per Azioni

5. Strategic Frameworks

Project FEDERATES and alignment with NATO MSaaS vision.

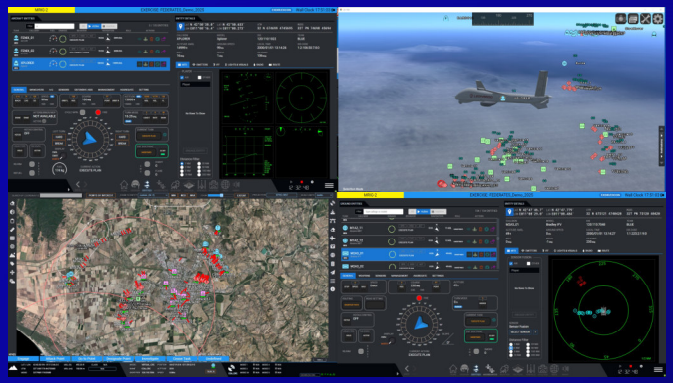

Please avoid printing this colourful slide. Let's save the planet together.

Multi-Domain EU Framework: Project FEDERATES

EDF Initiative:

European Modelling and Simulation as a Service (MSaaS) implementation.

Cross-Domain Vignettes:

Simultaneous Air (BVR), Ground, Naval (ASW), and Space/Ballistic Missile Defence (BMD) simulation.

Inspiration: SU-57 Felon (5° gen.)	Stealth config.
4 x AA-12 Adder (INS/ARH)	Front/Aft Fuselage Bays
2 x AA-11 Archer (IR)	Right/Left Wing Root Bays
GSh-30-1	30x165mm Gun 150 (rounds)
N036 Byelka	AESA Radar
101KS-V	IRST
TKS-2	Datalink
101KS-U	Missile Approach Warner
L402 Himalayas	ESM/RWR
Chaffs & Flares	
Committ @ 70 NM (Red Air to Blue Assets)	4-ship CAP «grinder» L&L / L&Banzai Tactics

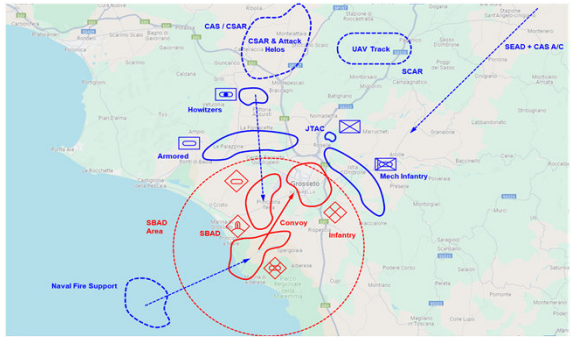

https://defence-industry-space.ec.europa.eu/document/download/2323e186-afd1-43e8-860a-4c910563a680_en?filename=FEDERATES%20-%20Factsheet_EDF22.pdf

© 2026 Leonardo - Società per Azioni

Conclusion & Strategic Takeaways

NATO MSaaS Alignment:

Native HLA/DIS interoperability for seamless allied integration.

The Future:

A scalable mission-rehearsal tool to master decision-making, increase readiness, and reduce environmental impact.

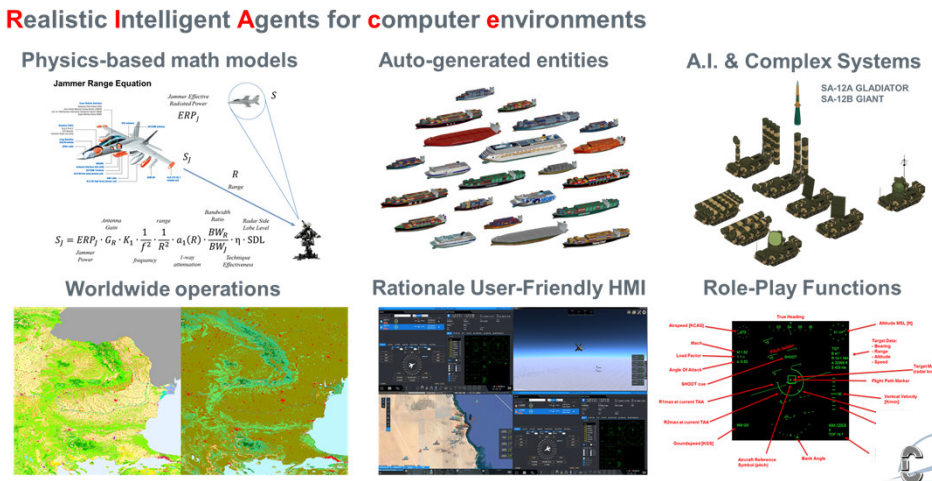

© 2026 Leonardo - Società per Azioni

Leonardo Electronics

LUCA CISTRIANI
Head of Distributed Synthetic Environment
M +39 3665624908
luca.cistriani@leonardo.com

© 2026 Leonardo - Società per Azioni

RIAce

Thank you
for your attention

CAX² FORUM
COMPUTER ASSISTED ANALYSIS EXERCISE EXPERIMENTATION

Please avoid printing this colourful slide. Let's save the planet together.

leonardo.com